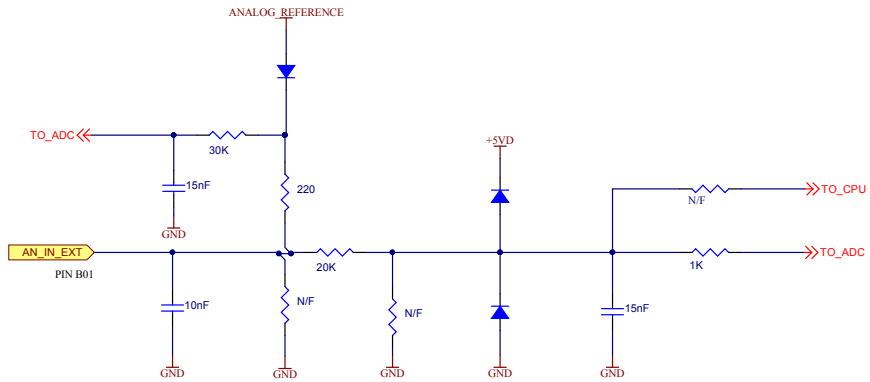

ANALOG INPUT WITH PULL DOWN

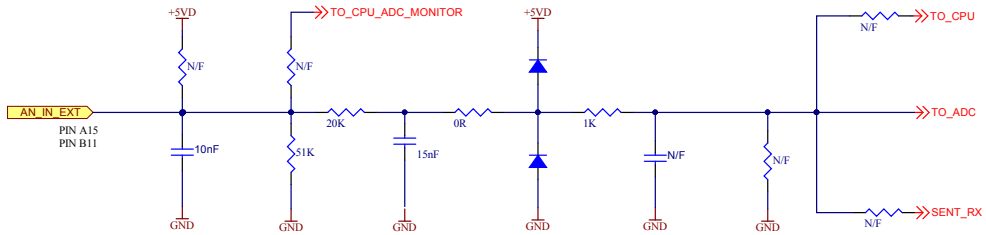

ANALOG INPUT WITH PULL UP

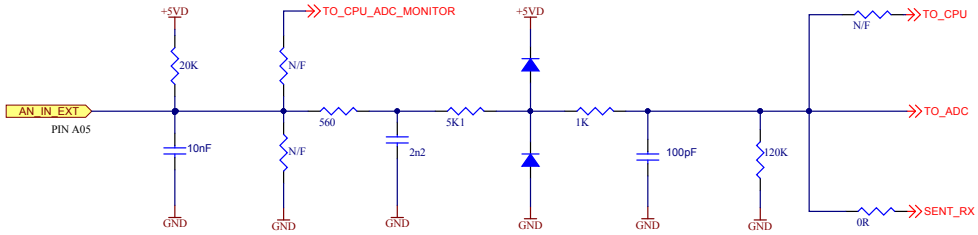

ANALOG INPUT WITH GAIN

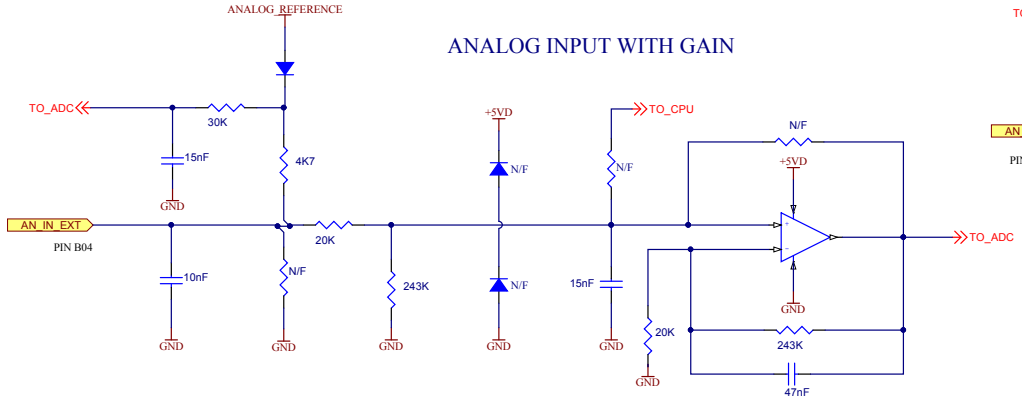

ANALOG INPUT WITHOUT GAIN

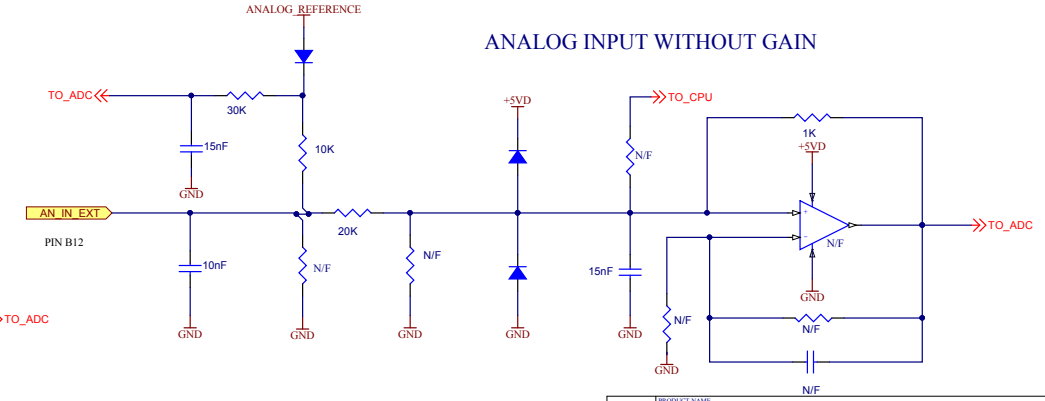

PRODUCT NAME	[No Variations]
SHEET TITLE	ANALOG INPUTS
ANSI B	Assy Part Number: 29T-068909 PCB Part Number:
CD Issue: 1	
Filename: Analog_Inputs.SchDoc	Sheet 1 of 8
Date: 1/13/2017	SVN $Revision:: 8008 $ Drawn By: O.Dmitry

ANALOG OUTPUT WITH GAIN AND PROTECTION SHUTDOWN

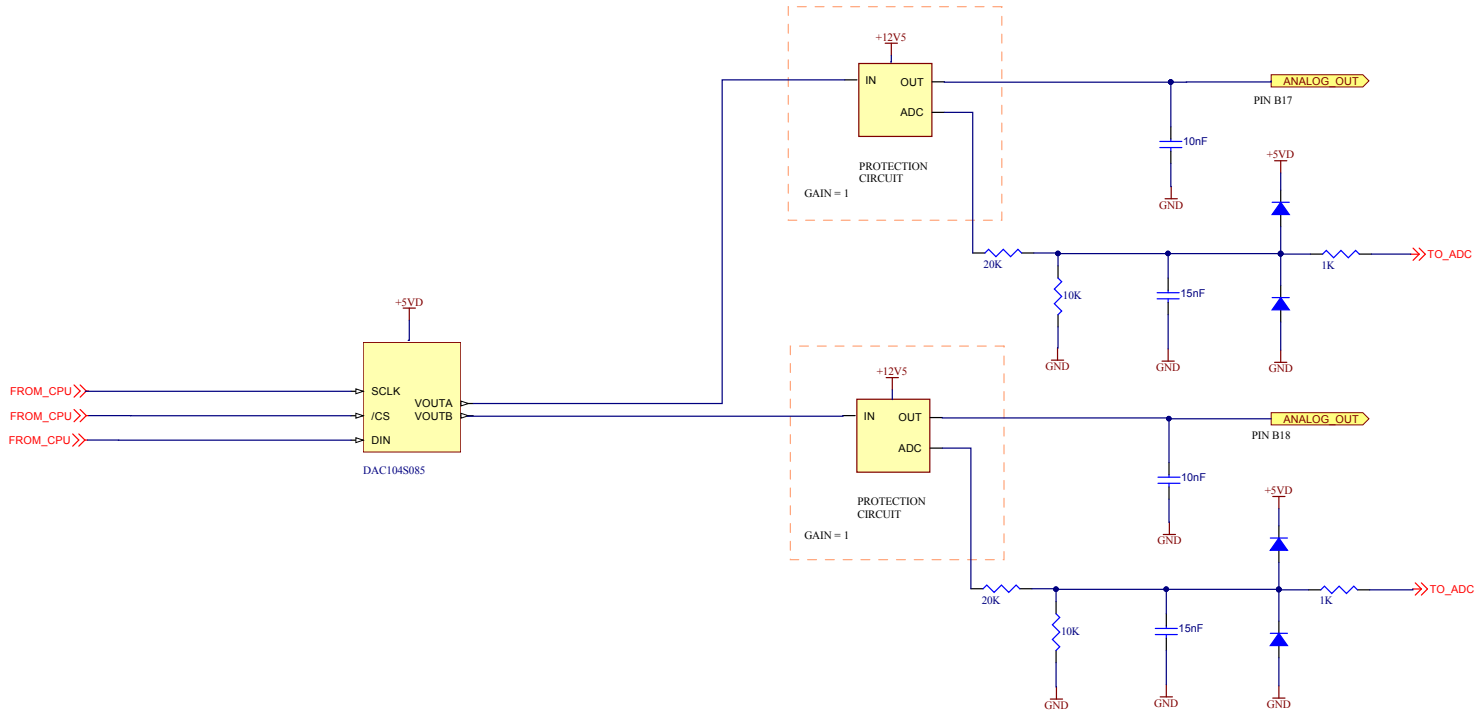

	PRODUCT NAME [No Variations]	
	SHEET TITLE ANALOG OUTPUTS	
ANSI B	Assy Part Number: 29T-068909 PCB Part Number:	CD Issue: 1
Filename: Analog_Outputs.SchDoc		Sheet 2 of 8
Date: 1/13/2017	SVN $Revision:: 8001 $	Drawn By: O.Dmitry

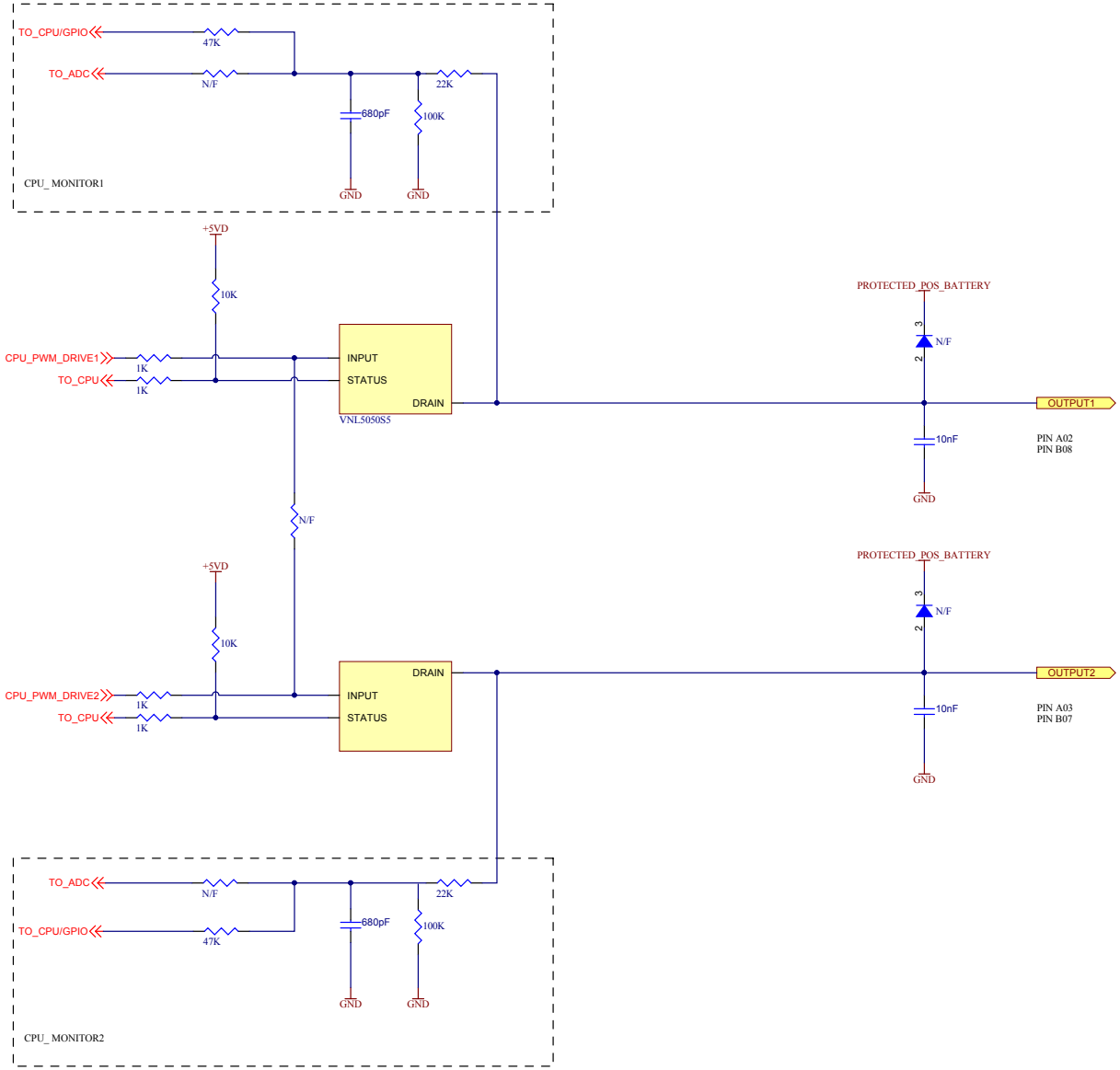

	PRODUCT NAME [No Variations]	
	SHEET TITLE 2A Low Side Output	
ANSI B	Assy Part Number: 29T-068909 PCB Part Number:	CD Issue: 1
Filename: Low_Side_Output_2A.SchDoc		Sheet 3 of 8
Date: 1/13/2017	SVN $Revision:: 8001 $	Drawn By: O.Dmitry

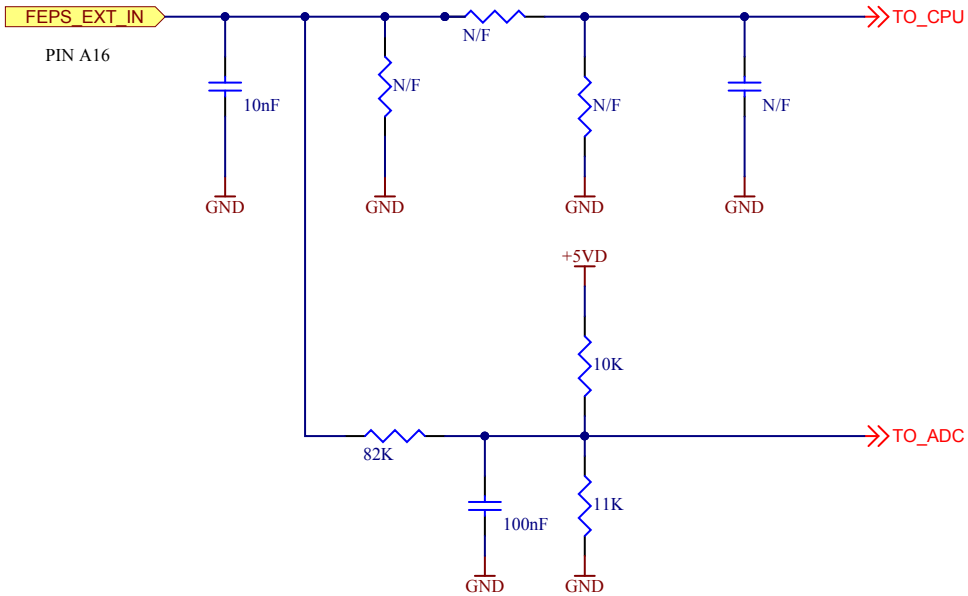

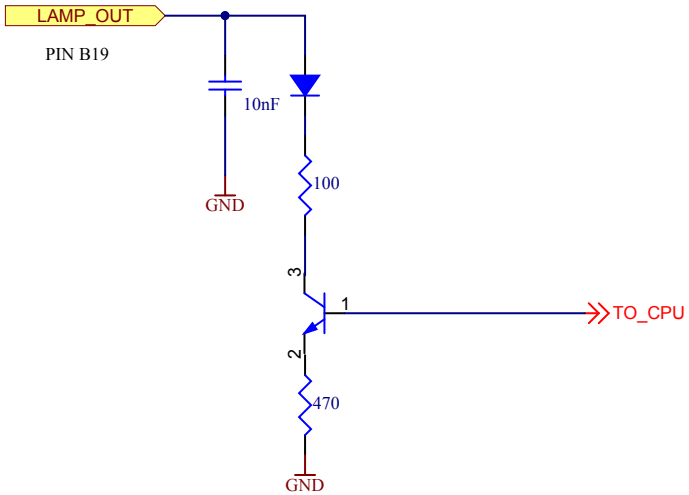

	PRODUCT NAME M110 Simplified IO Schematics		
	SHEET TITLE LOW SPEED DIGITAL INPUTS		
A4	Assy Part Number: 29T-068909 PCB Part Number:	Revision 1	Mod State 0
Filename: Low_Speed_Digital_Inputs.SchDoc		Sheet 4 of 8	
Date: 1/13/2017	SVN $Revision:: 8001 $	Drawn By: O.Dmitry	

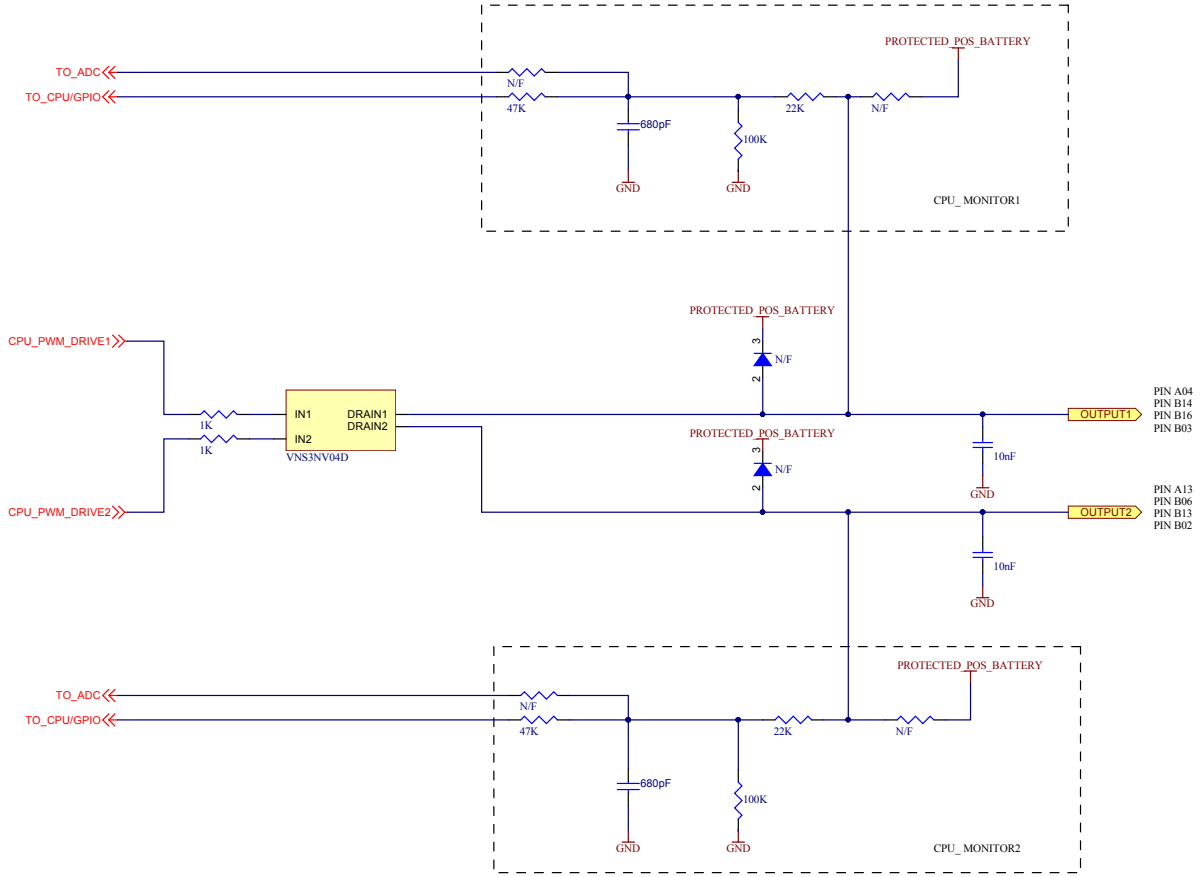

	PRODUCT NAME [No Variations]	
	SHEET TITLE RELAY LSD OUTPUTS	
ANSI B	Assy Part Number: 29T-068909 PCB Part Number:	CD Issue: 1
Filename: Relay_LSD_Outputs.SchDoc		Sheet 5 of 8
Date: 1/13/2017	SVN $Revision:: 8001 $	Drawn By: O.Dmitry

SPI TO CAN BUS

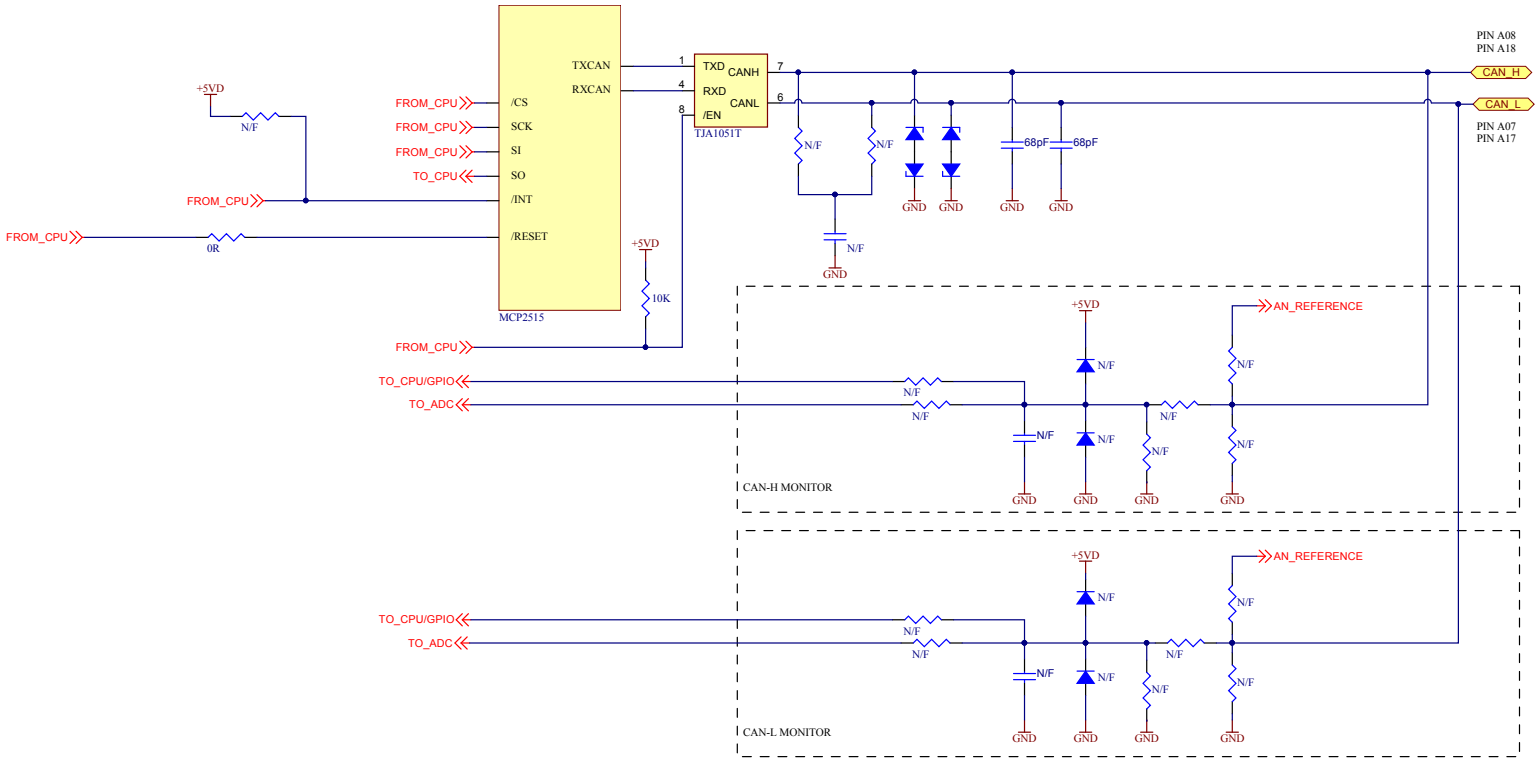

PRODUCT NAME	[No Variations]
SHEET TITLE	SPI SERIAL COMMS
ANSI B	Assy Part Number: 29T-068909 PCB Part Number:
CD Issue: 1	
Filename: SPI_Serial_Communication.SchDoc	Sheet 6 of 8
Date: 1/13/2017	SVN $Revision:: 8008 $ Drawn By: O.Dmitry

CAN BUS

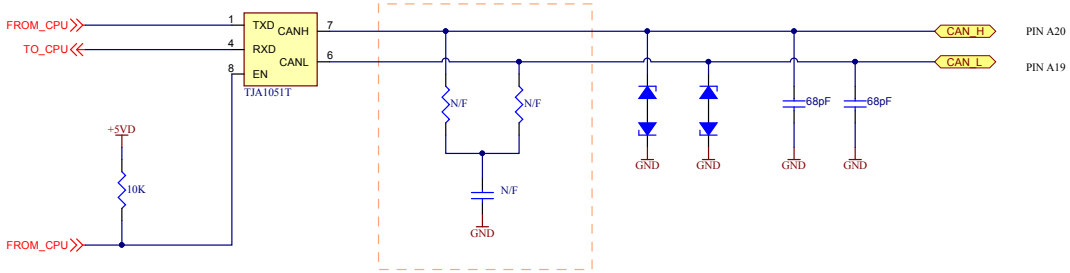

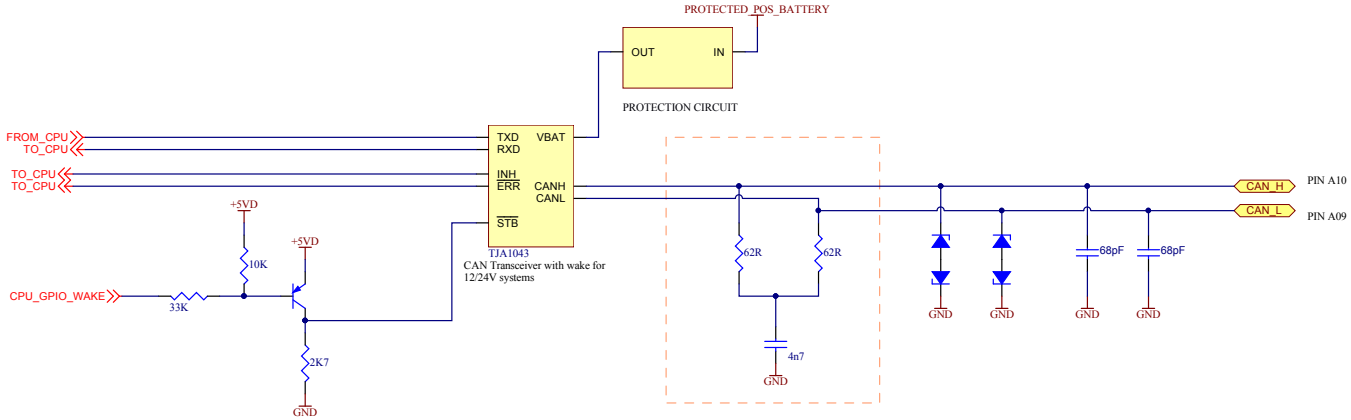

LIN BUS

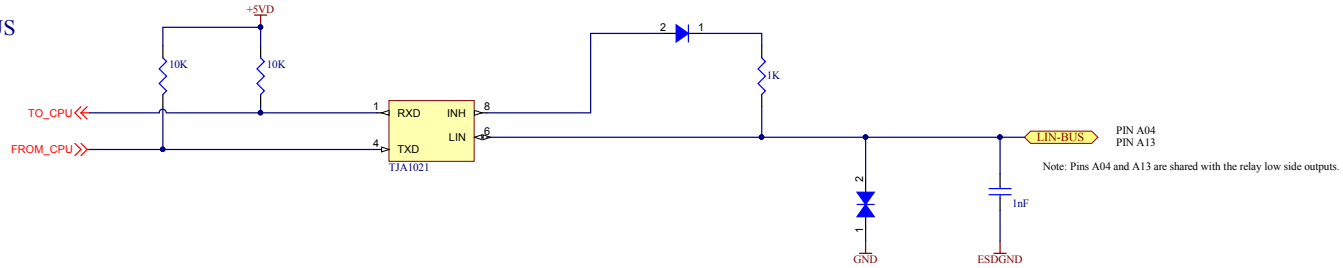

	PRODUCT NAME: [No Variations]	
	SHEET TITLE: SERIAL COMMS	
ANSI B	Assy Part Number: 29T-068909 PCB Part Number:	CD Issue: 1
Filename: Serial_Communication.SchDoc		Sheet 7 of 8
Date: 1/13/2017	SVN $Revision:: 8008 $	Drawn By: O.Dmitry

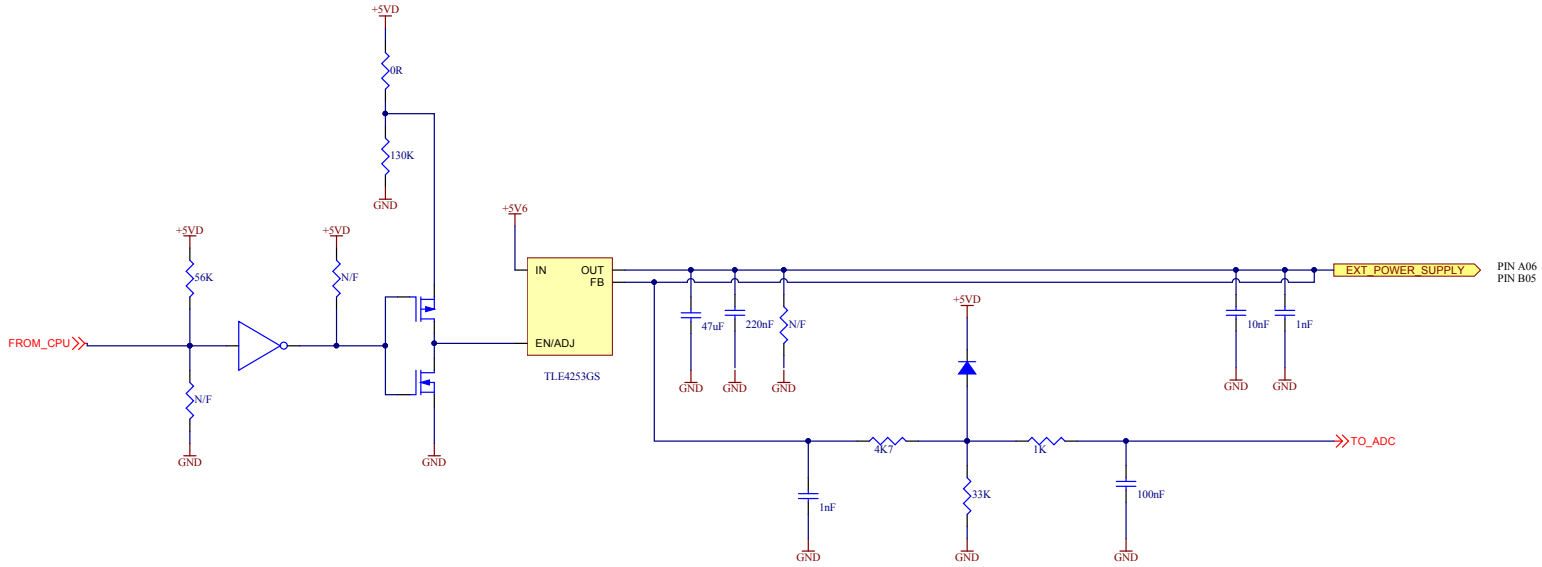

	PRODUCT NAME [No Variations]	
	SHEET TITLE Voltage Reference Output	
ANSI B	Assy Part Number: 29T-068909 PCB Part Number:	CD Issue: 1
Filename: Volt_Ref_Power_Supply.SchDoc		Sheet 8 of 8
Date: 1/13/2017	SVN $Revision:: 8015 $	Drawn By: O. Dmitry